Product data sheet (PDF)

Axor Urquiola
3-Hole Basin Mixer DN15 with escutcheons

Description

- ComfortZone 50
- normal spray
- flow rate: 5 l/min
- with ceramic valves hot/cold 90°
- temperature limitation not adjustable
- pop-up waste set G 1 ¼
- suitable for continuous flow water heaters

Surfaces	Art. no.
chrome	11041000

Product image
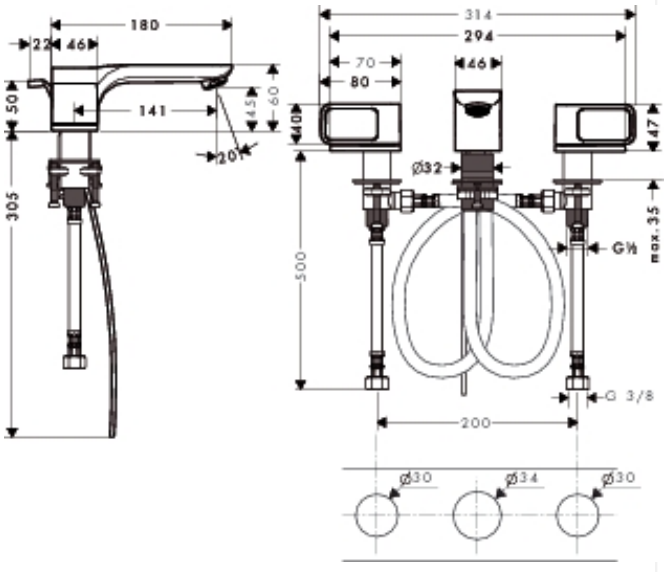
Scale drawing